UNITED TRANSFORMER CORPORATION

150 VARICK STREET, NEW YORK 13, N. Y.

RECOMMENDED VACUUM TUBE AMPLIFIER CIRCUIT PROVIDING 50 WATTS

± 1 db 40 cycles to 10 KC . . .

At 1 watt, ± 1 db 20 cycles to 20 KC.

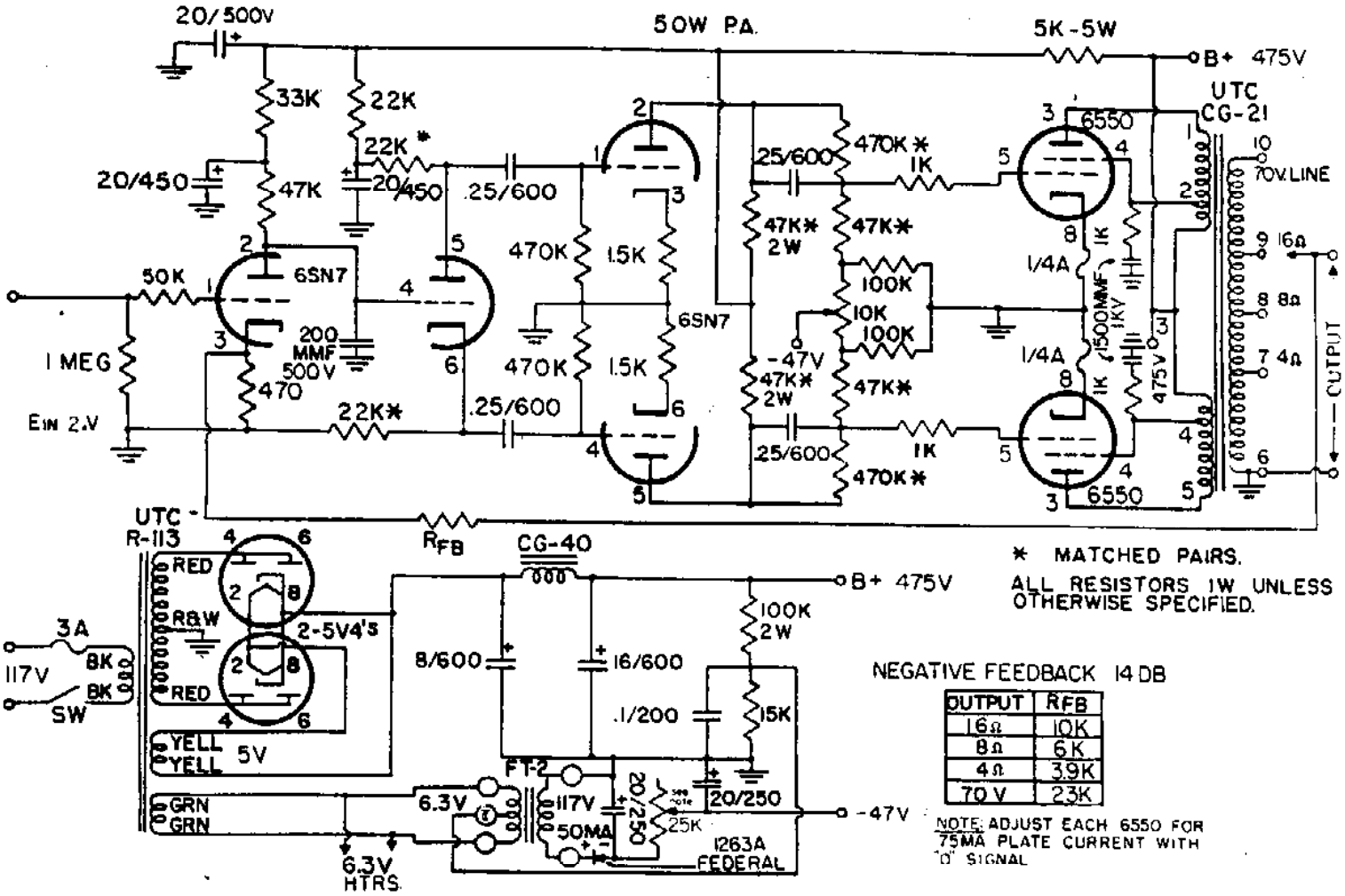

NEGATIVE FEEDBACK 14 DB

OUTPUT	RFB
16Ω	10K
8Ω	6K
4Ω	3.9K
70 V	23K

NOTE: ADJUST EACH 6550 FOR 75MA PLATE CURRENT WITH "0" SIGNAL