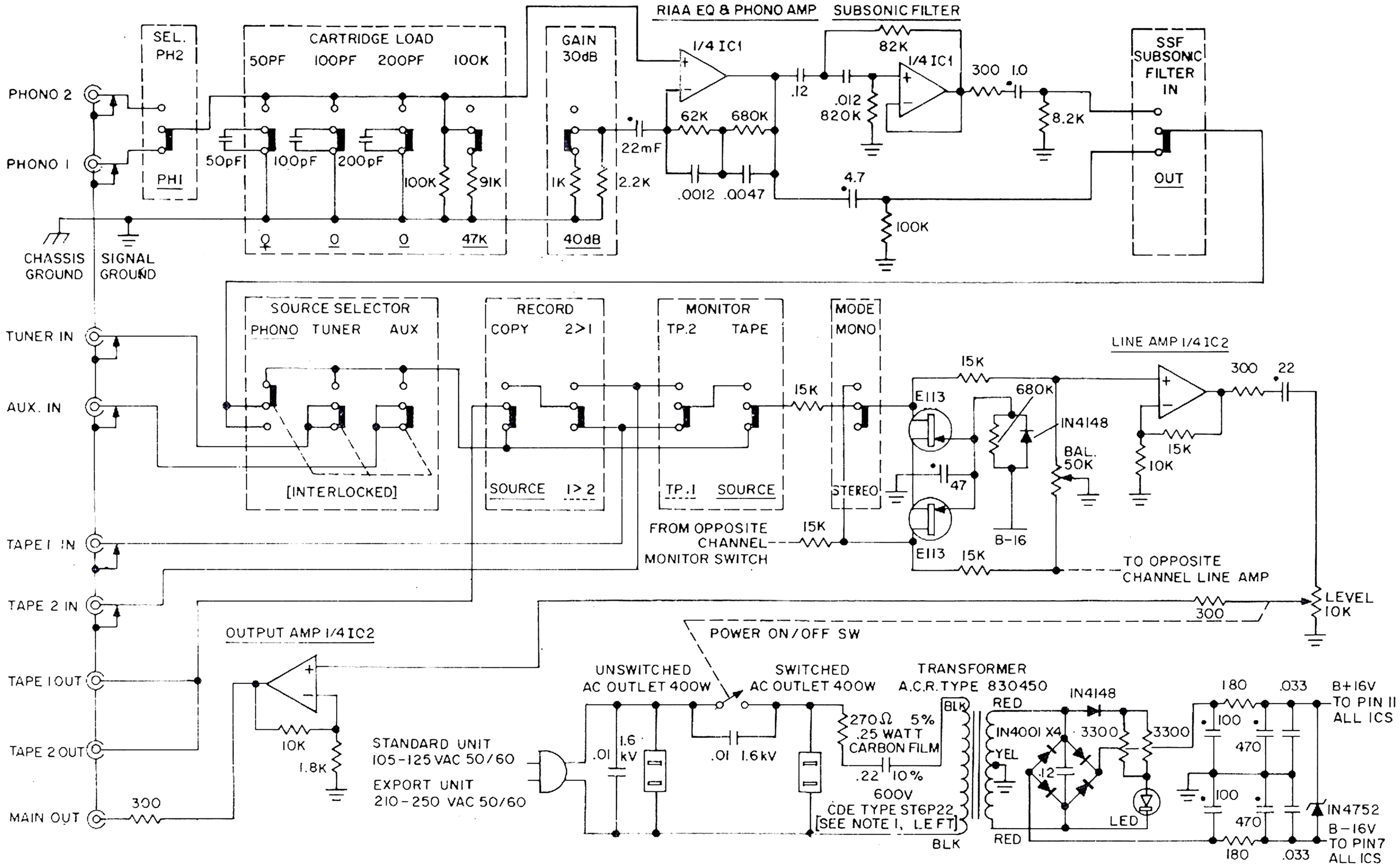

NOTE 1: 270Ω 5% .25 WATT CARBON FILM RESISTOR IS A FUSE LINK. USE EXACT REPLACEMENT ONLY. THIS RESISTOR IS USED IN BOTH STANDARD 105-125V UNITS AND EXPORT 210-250V UNITS. BOTH VERSIONS USE SAME TRANSFORMER — DO NOT SUBSTITUTE!! THE .22MF CAPACITOR IS AN AC CURRENT-LIMITING DEVICE USED ONLY IN 210-250V UNITS. THIS IS A SPECIAL U.L. APPROVED TYPE — DO NOT SUBSTITUTE!! TO CONVERT 210-250V UNIT TO 105-125V UNIT REMOVE THIS CAPACITOR AND WIRE-BRIDGE THE TERMINALS.

NOTE 2: ALL IC'S TYPE 4136 EXAR OR FAIRCHILD — ALL RESISTORS ARE .5 WATT 5% UNLESS NOTED — ALL CAPACITORS GIVEN IN MFD UNLESS NOTED — ONE CHANNEL ONLY IS SHOWN HERE

SPECTRO ACOUSTICS MODEL 217 PREAMPLIFIER